CAD GENERATED DRAWING. DON'T CHANGE BY HAND.

REV.	ECN. NO.	APPD.

30 Min/1.5m
IP-X8

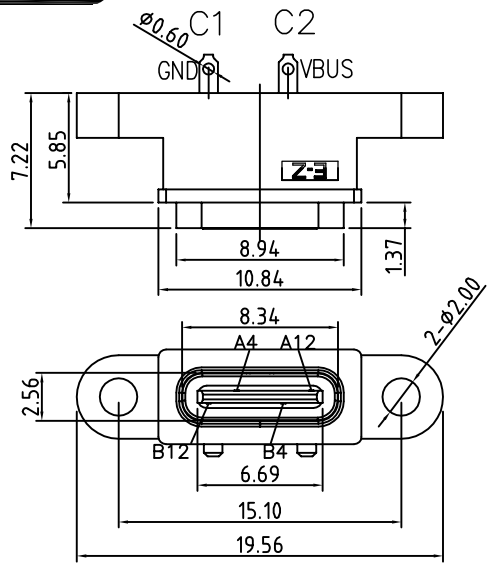

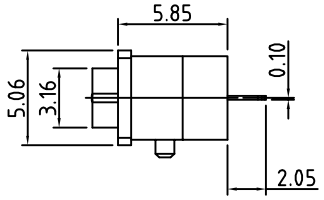

INTERFACE(FRONT VIEW)

A1	A2	A3	A4	A5	A6	A7	A8	A9	A10	A11	A12
			VBUS								GND
GND								VBUS			
B12	B11	B10	B9	B8	B7	B6	B5	B4	B3	B2	B1

PIN ASSIGNMENT

PIN NO.	A12&B12	A4&B4
SINGAL NAME	GND	VBUS
PCB PAD NO.	C1	C2

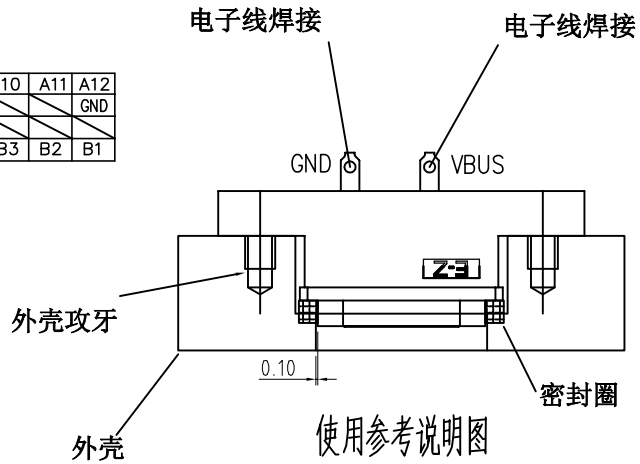

使用参考说明图

无需PCB板，可直接焊线

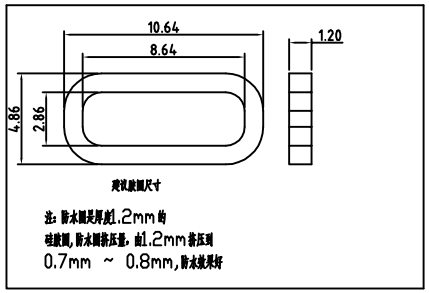

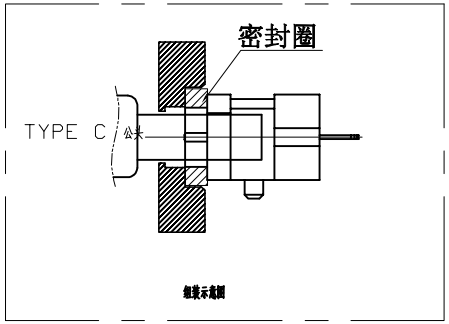

组装示意图

NOTES:

SPECIFICATION:

1. CURRENT RATING: 3.0A MAX
2. DIELECTRIC WITHSTAND VOLTAGE: 100VAC
3. TEMPERATURE RANGE: -30 °C ~ 85 °C
4. CONTACT RESISTANCE: 40 MILLIONHM MAX
5. INSULATION RESISTANCE: 100 MEGOHMS MIN.
6. INSERTION FORCE : 5N~20N
7. UNMATING FORCE: 8N~20N
8. DURABILITY:5000 CYCLES

ITEM	PARTNAME	Q'TY	FINISH	NOTE
5	Shell2	1	SUS304 Ni Plating T=0.20mm	Ni:40~120u";
4	Shell1	1	SUS304 Ni Plating T=0.3mm	Ni:40~120u";
3	Housing2	1	LCP(G.F30%)	
2	Contact	4	Phosphor bronze C5210R-EH Au/Ni Plating T=0.20mm	Ni:40~160u"; Au:CONTACT AREA:3u" OTHER AREA:G/F
1	Housing	1	PA9T (G.F30%)	

X. ±0.50	X.° ± 2°	UNITS mm	深圳市合众益华科技有限公司
.X ±0.30	.X° ± 1°		
.XX ±0.10	.XX° ± 0.5°	MAT'L	PART NO. EZ-USBC-1127 / TITLE: 2PIN外接焊线式防水TYPEC
.XXX ± 0.05			
		FINISH	APPD: RADOM / DWG NO.: EZ-USBC-1127
		Q'TY	CHKD: MARK / SCALE 1/1 / SHEET 1/2 / REV. A1
			DR: wujy 2021/02/02

THESE DRAWINGS AND SPECIFICATIONS ARE THE PROPERTY OF E-ZONE ELECTRONIC TECHNOLOGY CO.,LTD.AND SHALL NOT BE REPRODUCED. COPIED OR USED IN ANY MANNER WITHOUT THE PRIOR WRITTEN CONSENT OF E-ZONE ELECTRONIC TECHNOLOGY CO., LTD

由 Autodesk 教育版产品制作