REVISIONS							
REV.	ECN NO.	LOCATION	DESCRIPTION	DATE	DESIGN	CHECKED	APPROVED
X1							

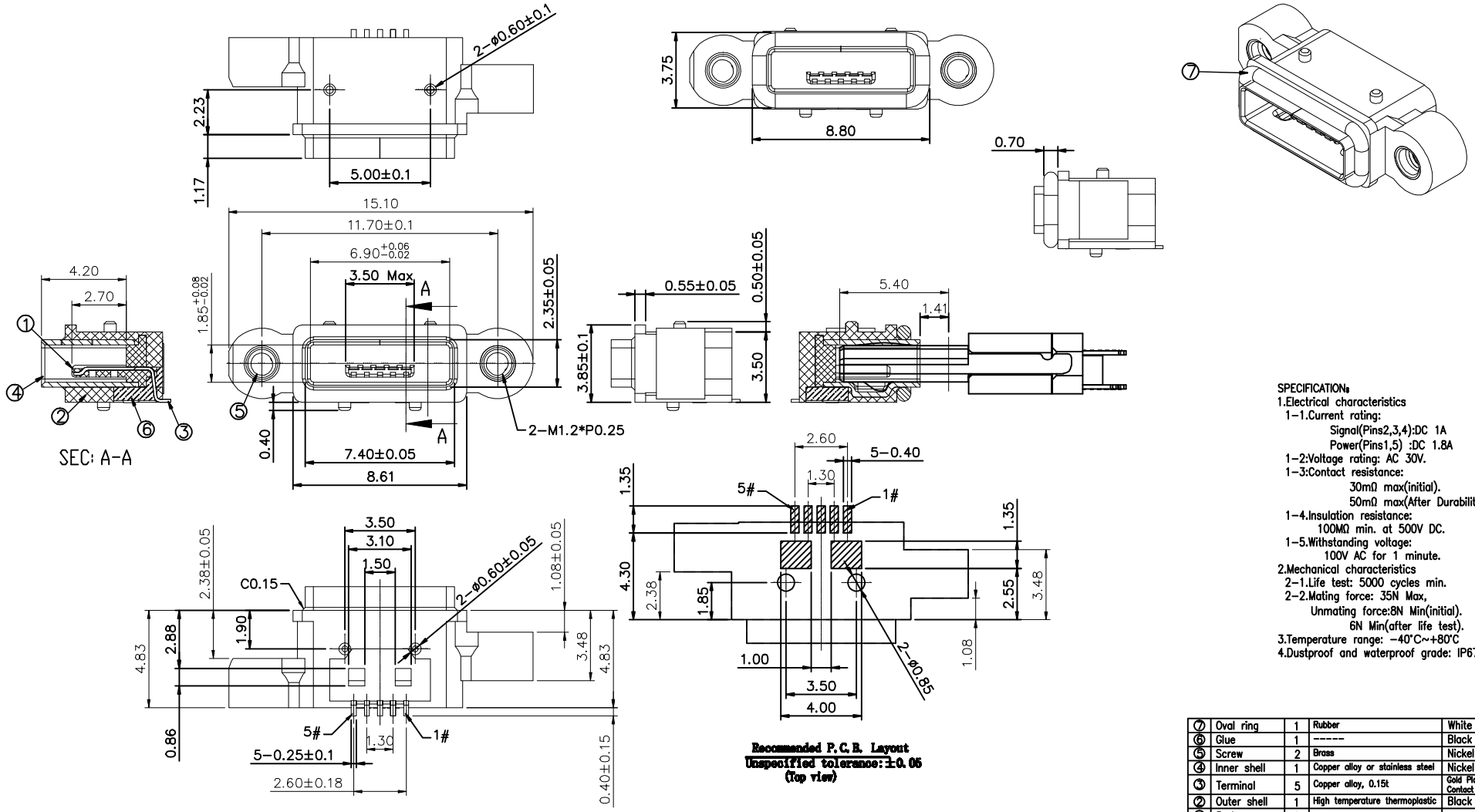

Recommended P.C.B. Layout
Unspecified tolerance: ±0.05
(Top view)

SPECIFICATION:
1.Electrical characteristics
1-1.Current rating:
Signal(Pins2,3,4):DC 1A
Power(Pins1,5) :DC 1.8A
1-2:Voltage rating: AC 30V.
1-3:Contact resistance:
30mΩ max(initial).
50mΩ max(After Durability)
1-4.Insulation resistance:
100MΩ min. at 500V DC.
1-5.Withstanding voltage:
100V AC for 1 minute.
2.Mechanical characteristics
2-1.Life test: 5000 cycles min.
2-2.Mating force: 35N Max,
Unmating force:8N Min(initial).
6N Min(after life test).
3.Temperature range: -40°C~+80°C
4.Dustproof and waterproof grade: IP67

NO.	DESCRIPTION	QTY	MATERIAL	REMARK
⑦	Oval ring	1	Rubber	White
⑥	Glue	1	------	Black
⑤	Screw	2	Brass	Nickel plated
④	Inner shell	1	Copper alloy or stainless steel	Nickel plated
③	Terminal	5	Copper alloy, 0.15t	Gold Plated On Contact Area.
②	Outer shell	1	High temperature thermoplastic	Black
①	Body	1	High temperature thermoplastic	Black

Contact Number	Signal Name	Remarks
1#	VBUS	Power
2#	D-	Date-
3#	D+	Date+
4#	ID	Reserve or Gound
5#	GND	Gound

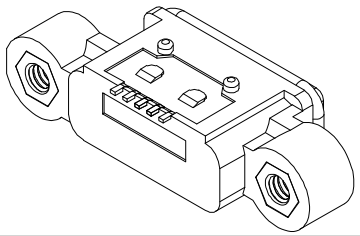

MEASURE POINT: (XX)
QUADRANT POINT (QP)
TANGERCY POINT (TP)
INTERSECTION POINT (IP)

UNLESS OTHERWISE SPECIFIED, TOLERANCE:
X. ±0.20
X.x ±0.15
X.xx ±0.10
X.xxx ±0.05
ANGULAR ±2°

深圳市合众益华科技有限公司

DESIGN cc	DATE 2009/02/19	TITLE: MICRO USB ASSEMBLY DRAWING		
CHECKED	DATE			
APPROVED	DATE			
PART NO. EZ-USB-1178M		REV.: X1	SCALE: 1:1	UNIT: mm
DRAWING		SIZE: A4	SHEET: 1/1	