REVISIONS							
REV.	ECN NO.	LOCATION	DESCRIPTION	DATE	DESIGN	CHECKED	APPROVED
X1							

MODEL NO.:
EZ-PJ-S32540
(1) Series no.
(2) Schematic type: A,B,C
(3) Housing color:
BK7=Black
(4) Terminal plating:
AU03=Plating AU 3u" min.
(5) Packing mode:L=Reel packing
(6) Environmental requirements:
Rh=RoHS 2.0+ Halogen Free

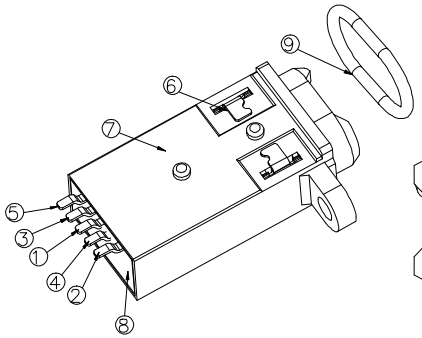

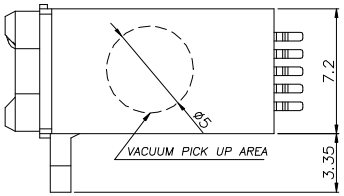

Matching Plug

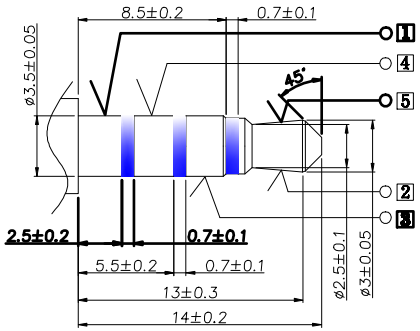

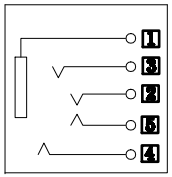

Circuit Diagram

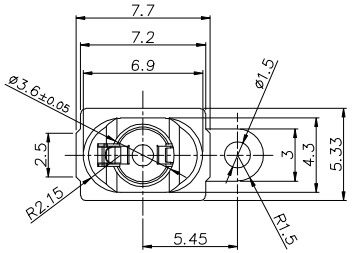

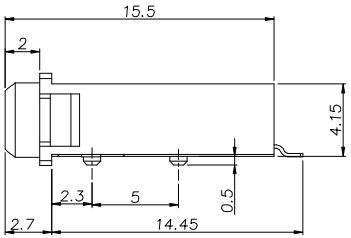

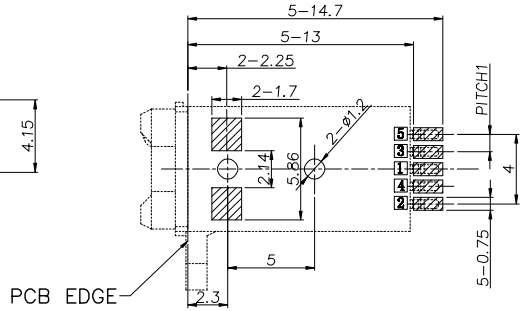

RECOMMENDED P.C.B LAYOUT
TOP VIEW (TOLRANCE:±0.05)

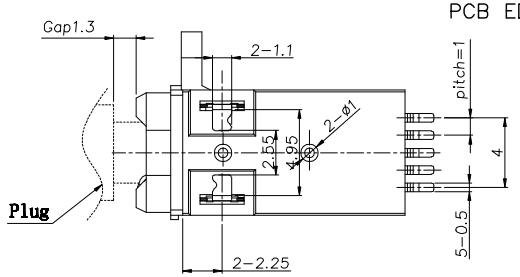

SPECIFICATION:
1. Electrical characteristics
1-1. Current rating:DC 0.5A max.
1-2:Voltage rating:DC 30V.
1-3:Contact resistance:50mΩ max
1-4. Insulation resistance:1000MΩ min. at 500V DC.
1-5. Withstanding voltage:500V AC for 1 minute.
2. Mechanical characteristics
2-1. Life test:5000 cycles min,
2-2. Mating force:3~30N,
Unmating force:3~30N.
3. Temperature range: -40° C~+80° C
4. Dustproof and waterproof grade: IP67
.

NO.	DESCRIPTION	QTY	MATERIAL	REMARK
9	Rubber ring	1	Silica Gel	White
8	cover	1	HIGH TEMPERATURE PLASTIC	Black
7	Housing	1	HIGH TEMPERATURE PLASTIC	Black
6	Shunt	2	Phosphor bronze, 0.15t	3u"Au on Contact Area And Gold Flash On Other Area.
5	Tip spring 5	1	Phosphor bronze, 0.20t	
4	Ring spring 4	1	Phosphor bronze, 0.20t	
3	Ring spring 3	1	Phosphor bronze, 0.20t	
2	Tip spring 2	1	Phosphor bronze, 0.20t	
1	Earth spring 1	1	Phosphor bronze, 0.20t	

MEASURE POINT: (XX)
QUADRANT POINT (QP)
TANGERCY POINT (TP)
INTERSECTION POINT (IP)

UNLESS OTHERWISE SPECIFIED, TOLERANCE:
X. ±0.20
X.x ±0.15
X.xx ±0.10
X.xxx ±0.05
ANGULAR ±2°

深圳市合众益华科技有限公司

DESIGN cc	DATE 2012/02/19	TITLE: PHONE JACK ASSEMBLY DRAWING		
CHECKED	DATE			
APPROVED	DATE			
PART NO. EZ-PJ-S32540		REV.: X1	SCALE: 1:1	UNIT: mm
DRAWING		SIZE: A4	SHEET: 1/1	