REV.	ECN. NO.	APPD.

CAD GENERATED DRAWING. DON'T CHANGE BY HAND.

30 Min/1.5m
IP-X8

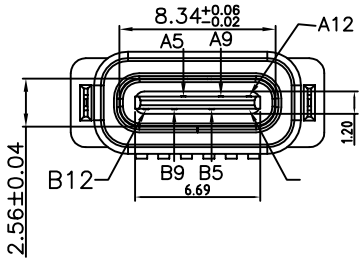

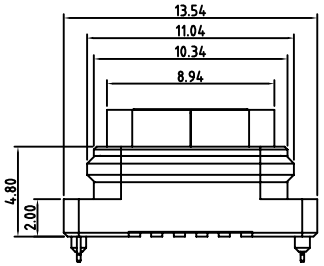

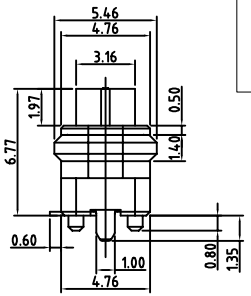

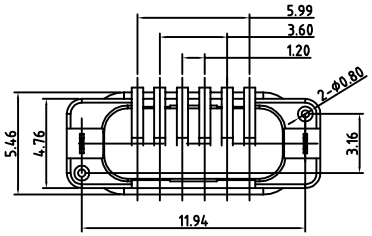

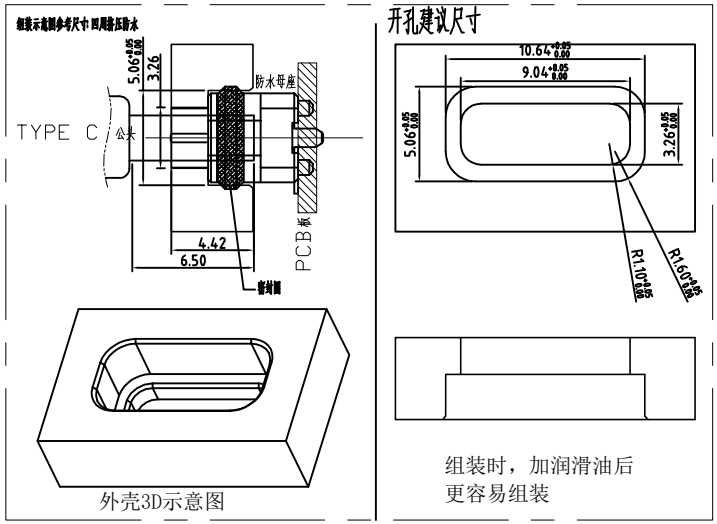

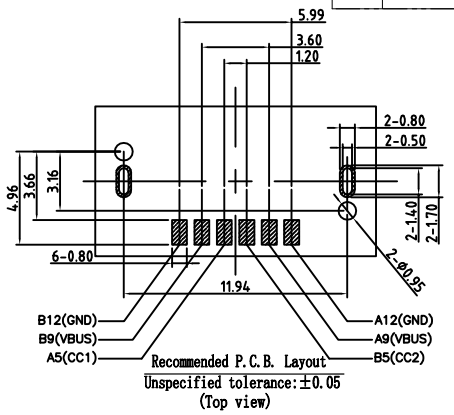

RECOMMENDED PCB LAYOUT(TOP VIEW)

THICKNESS T=1.0mm
DEFAULT TOLERANCE+/−0.05

NOTES:
SPECIFICATION:
1. CURRENT RATING: 3.0A MAX
2. DIELECTRIC WITHSTAND VOLTAGE: 100VAC
3. TEMPERATURE RANGE: −30 °C ~ 85 °C
4. CONTACT RESISTANCE: 40 MILLIONHM MAX
5. INSULATION RESISTANCE: 100 MEGOHMS MIN.
6. INSERTION FORCE : 5N~20N
7. UNMATING FORCE: 8N~20N
8. DURABILITY:5000 CYCLES

A5	CC1	B12	GND
A9	VBUS	B9	VBUS
A12	GND	B5	CC2
PIN	SIGNAL NAME	PIN	SIGNAL NAME

ITEM	PARTNAME	Q'TY	FINISH	NOTE
4	Shell1	1	SUS304 Ni Plating T=0.25mm	Ni:40~120u";
3	Housing2	1	LCP(G.F30%)	
2	Contact	5	Phosphor bronze C5210R-EH Au/Ni Plating T=0.20mm	Ni:40~160u"; Au:CONTACT AREA:3u", OTHER AREA:G/F
1	Housing	1	PA9T (G.F30%)	

X.	±0.50	X.°	± 2°
.X	±0.30	.X°	± 1°
.XX	±0.10	.XX°	± 0.5°
.XXX	± 0.05		

UNITS mm
MAT'L
FINISH
Q'TY

THESE DRAWINGS AND SPECIFICATIONS ARE THE PROPERTY OF E-ZONE ELECTRONIC TECHNOLOGY CO.,LTD.AND SHALL NOT BE REPROOUCED. COPIED OR USED IN ANY MANNER WITHOUT THE PRIOR WRITTEN CONSENT OF E-ZONE ELECTRONIC TECHNOLOGY CO., LTD

深圳市合众益华科技有限公司

PART NO. EZ-USBC-1143-6PIN-S

TITLE: TYPE C 6Pin SMT 立式贴片安装座

APPD: RADOM
CHKD: MARK
DR: JOIN 2022/05/18

DWG NO.: EZ-USBC-1143-6PIN-S

SCALE	SHEET	REV.
1/1	1/2	A1

由 Autodesk 教育版产品制作