由 Autodesk 教育版产品制作

REVISIONS					
REV.	ECN NO.	LOCATION	DESCRIPTION	DATE	DESIGN
X1	NA		INITIAL RELEASE	2017.09.25	WIND

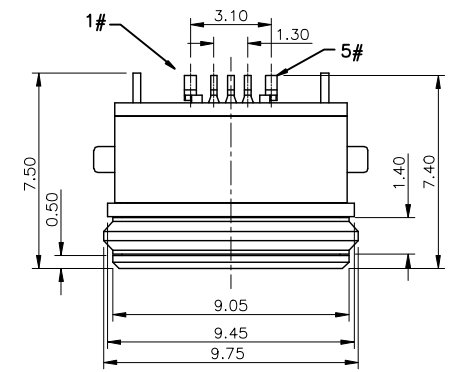

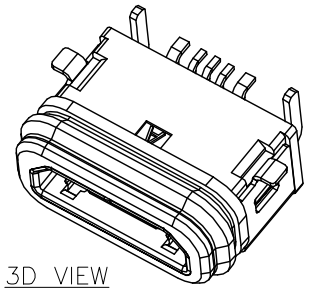

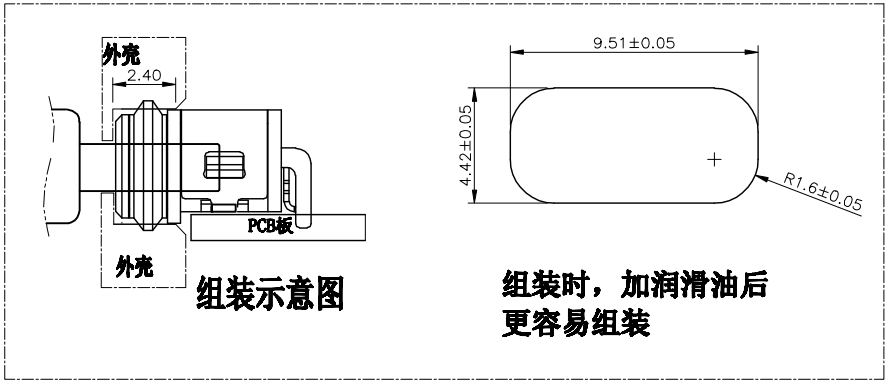

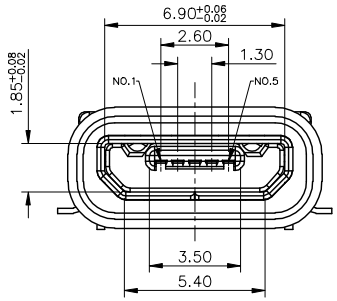

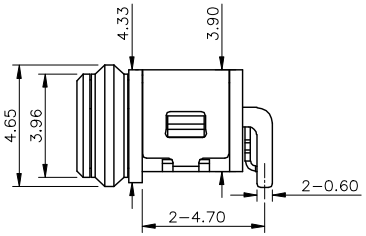

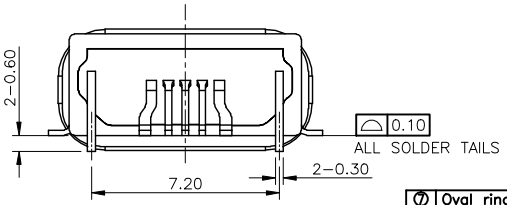

NO.	DESCRIPTION	QTY	MATERIAL	REMARK
⑦	Oval ring	1	Rubber	Black
⑥	Glue	1	------	Black
⑤	U-shaped frame	1	Copper alloy or stainless	Nickel plated
④	Inner shell	1	Copper alloy or stainless	Nickel plated
③	Terminal	5	Copper alloy, 0.15t	Gold Plated On Contact Area.
②	Outer shell	1	High temperature thermoplastic	Black
①	Body	1	High temperature thermoplastic	Black

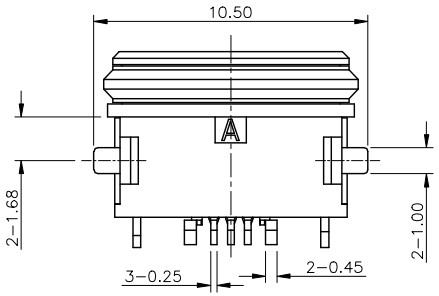

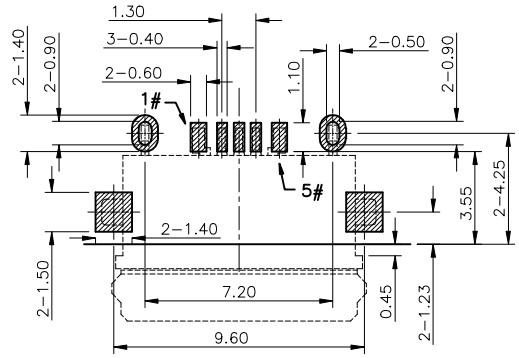

RECOMMENDED P.C.B. LAYOUT (TOP VIEW)
GENERAL TOLERANCE: ±0.05

SPECIFICATIONS:
1. ELECTRICAL CHARACTERISTICS:
   1.1. RATING: 3A(PIN1&5),0.5A(PIN2&3&4);
   1.2. CONTACT RESISTANCE: 30 mΩ MAX.(INITIAL);
   1.3. DIELECTRIC WITHSTANDING: 500V AC MIN.;
   1.4. INSULATION RESISTANCE: 1000MΩ MIN.;
2. DURABILITY: 10,000 CYCLES MIN.;
3. INSERTION FORCE: 3.5Kgf (35N) Max.;
4. EXTRACTION FORCE: 0.8Kgf (8N) Min;
5. WATER PROOFNESS:THIS PRODUCT IS BASED ON IPX7(1m,30min)
6. PLUG INTERFACE DIMENSIONS COMFORM TO USB2.0 SPEC.
7. PACKAGING: TAPE & REEL.

Contact Number	Signal Name	Remarks
1#	VBUS	Power
2#	D-	Date-
3#	D+	Date+
4#	ID	Reserve or Gound
5#	GND	Gound

This document is the property of E-Zone development corporation.

深圳市合众益华科技有限公司

Unless otherwise specified, Tolerance:

X.	±0.30
X.x	±0.20
X.xx	±0.15
X.xxx	±0.10
Angles	±3°

DESIGN WIND	DATE 2017.09.21	TITLE: MICRO USB 2.0 B TYPE RECEPTACLE CUSTOMER DRAWING	
CHECKED	DATE		
APPROVED	DATE		
PART NO. EZ-USB-1188S		REV.: X1	SCALE: 6:1 / UNIT: mm
DRAWING NO. C-EZ-USB-1188-02		SIZE: A4	SHEET: 1/1

由 Autodesk 教育版产品制作